HARRINGTON
HOISTS AND CRANES

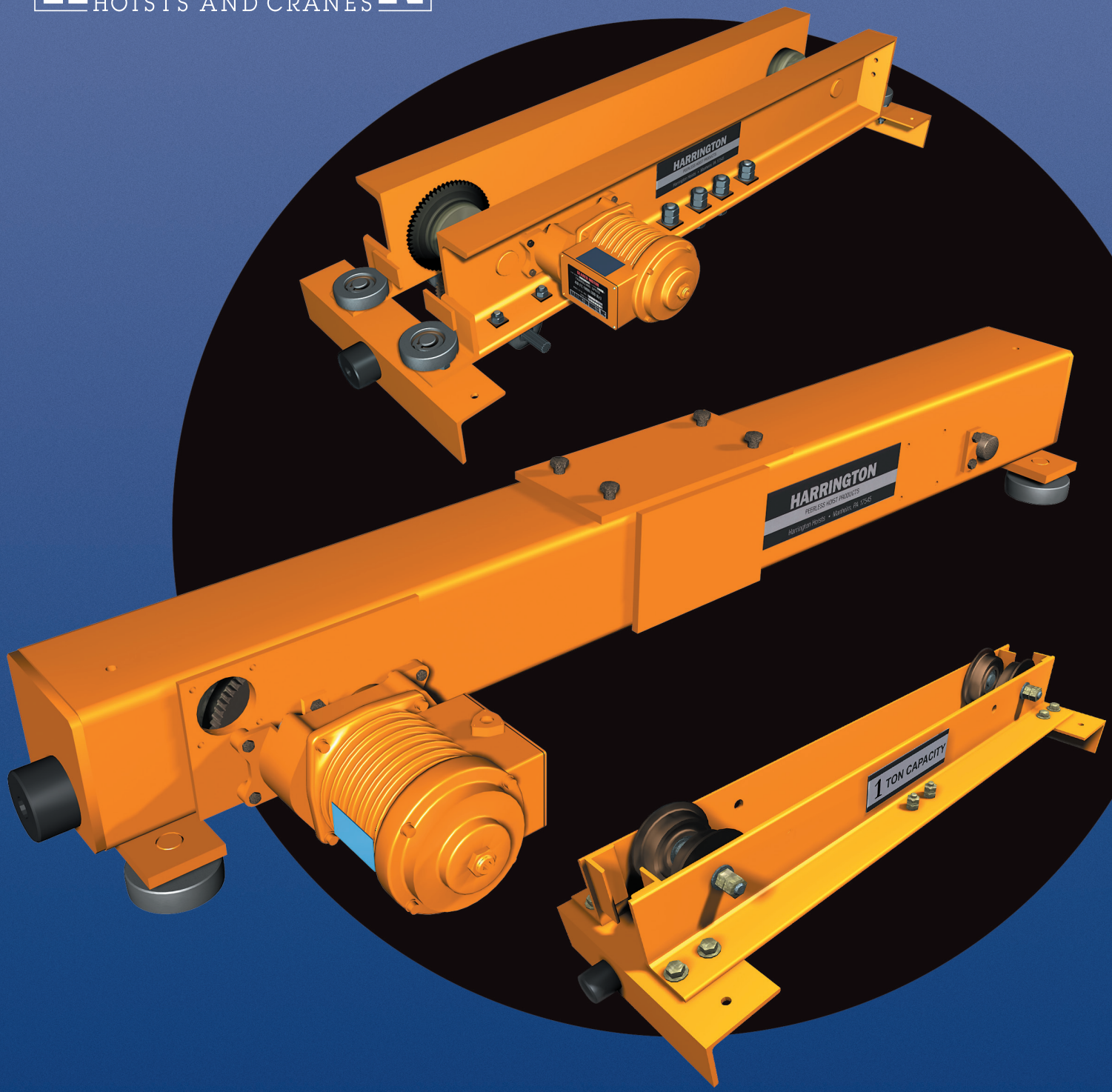

CRANE COMPONENTS

Working Harder For You

In 1876, Edwin Harrington dramatically improved the self-sustaining hoist by introducing the worm-gear design. Since then, the company he founded has earned a proud reputation for product innovations and consistent quality that our customers count on to meet their diverse requirements.

Over the years, we have developed and grown by recognizing the value of our customers and responding to your needs. The daily mission of our organization is to provide you, the customer, with the highest quality in our products, service and support.

In addition to our superior products and expanded facilities, we offer a Sales and Customer Service team that is dedicated to serving you, a well qualified Engineering Department to support your technical needs and a full support staff who all know the importance of working together to provide solutions for your material handling projects.

We are working harder to be the supplier-of-choice for all of your hoist and crane applications.

Table Of Contents

TM—Single Girder Top Running Motorized End Trucks

For heavy-duty class "C" single girder crane applications, nothing tops Harrington top running motorized end trucks. Along with a full range of features, end truck kits include: two trucks; two sealed, totally enclosed, non-ventilated (TENV) motors with adjustable D.C. brakes; two helical gear reducers; rubber bumpers; and bridge beam fastener set. All trucks are fully painted. Bridge fabrication prints are also included. As a member of Crane Manufacturers Association of America (CMAA), Harrington builds TM trucks to meet current industry and regulatory codes.

Benefits to count on:

- Frame fabrication from ASTM A500 structural tube for superior strength, rigidity and compactness.
- Reduced wheel friction due to heavy-duty side guide rollers results in smooth crane travel—guide rollers are 3 1/2" O.D. (5" on 10 T) with fixed steel axles.
- Minimize assembly labor with fully machined frames—girder connection, bracing and collector mounting bracket holes are drilled and tapped for easy installation.
- Purchase the right component for the job—dedicated models for capacities of 1, 3, 5 and 10 Ton, with maximum span increments of 35' or 60'.
- Suitable for use on ASCE crane rail or square bar—wheels are machined steel with flat tread and each has 2 deep groove ball bearings, meeting L10 bearing life criteria for class C cranes.
- Sealed TENV drives with quiet, smooth–operating helical gear reducers.
- Gear reducer is designed for easy field conversion between L and S speeds.
- Drives are designed for crane service, with 30 minute rating and feature cooling fins for efficient heat dissipation.
- Externally adjustable D.C. brakes allow controlled deceleration—adjustable up to 50% of rated motor torque.
- Thermal motor protection is standard.
- Drives and brakes are compatible with Electronic Acceleration Control (EAC) and Variable Frequency Drive (VFD).
- Drives are connectable for 230/460V-3-60 (including dual speed models). Other voltages available.
- Rail sweeps and drop stops are standard.
- Longer or shorter end truck lengths are available—consult factory.

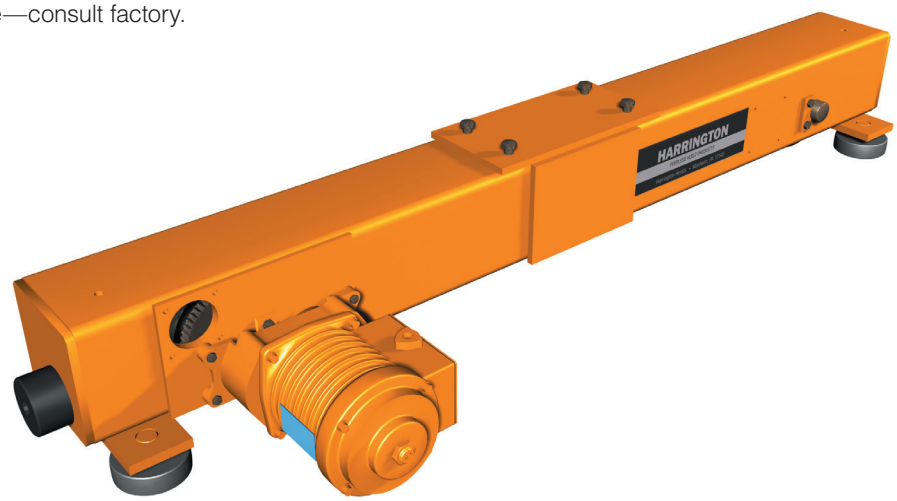

TM — TOP RUNNING MOTORIZED END TRUCK — DIMENSIONS

Cap. (Tons)	Max. Span (ft)	End Truck Product Code	Wheel Dia. (in)	Sug. Min. Runway Rail (ASCE#)	A Overall Length (in)	B Roller Base (in)	D Wheel Base (in)	N Runway Ctr. Line to Outer Edge of ET Tube (in)	X* Width Beyond Span (in)	Y Top of Rail to Top of End Truck (in)	G Motor (in)
1	35	TML/S/H/D-3-0135	3.74	30	61	53	43	2.1	4.6	7.1	12.7 (L/S) 13.1 (H) 14.0 (D)
	60	TML/S/H/D-3-0160			98	90	80				
3	35	TML/S/H/D-3-0335	6.10		62	54	43	3.8			13.0 (L/S) 13.4 (H) 14.3 (D)
	60	TML/S/H/D-3-0360			99	91	80				
5	35	TML/S/H/D-3-0535		40	62	54	43		4.7	9.2	
	60	TML/S/H/D-3-0560	8.27		99	90	74	3.5		9.3	15.0 (L/S/D) 15.4 (H)
10	35	TML/S/H/D-3-1035	9.84	60	63	53	37	5.3	6.3	11.3	17.4 (L/S/D) 18.7 (H)
	60	TML/S/H/D-3-1060			100	90	74				

*Based on suggested minimum runway rail.

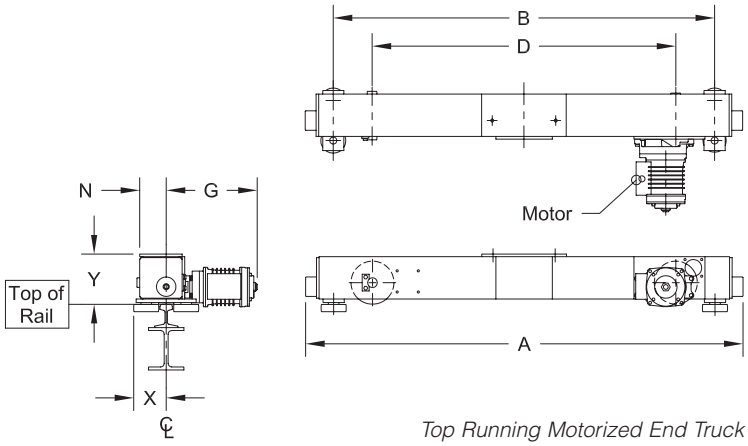

Top Running Motorized End Truck

TM — TOP RUNNING MOTORIZED END TRUCK — SPECIFICATIONS

End Truck Product Code	Speed Codes L and S: One Motor Per End Truck 3 Phase 60 Hz			Speed Code H: One Motor Per End Truck 3 Phase 60 Hz			Speed Code D: One Motor Per End Truck 3 Phase 60 Hz			End Truck Weight (lbs/pr)
	Output (Hp)	Rated Current (amps ea.) @230V	Rated Current (amps ea.) @460V	Output (Hp)	Rated Current (amps ea.) @230V	Rated Current (amps ea.) @460V	Output (Hp)	Rated Current (amps ea.) @230V	Rated Current (amps ea.) @460V	
TML/S/H/D-3-0135	0.33	1.6	1.0	0.5	2.1	1.3	0.33/0.08	1.6/1.1	0.9/0.8	325
TML/S/H/D-3-0160										422
TML/S/H/D-3-0335										421
TML/S/H/D-3-0360										538
TML/S/H/D-3-0535										512
TML/S/H/D-3-0560	0.5	2.1	1.3	1.0	3.3	2.0	0.5/0.13	2.0/1.5	1.2/0.9	739
TML/S/H/D-3-1035	1.0	3.3	2.0	2.0	5.8	3.1	0.1/0.25	3.7/2.1	2.3/1.4	883
TML/S/H/D-3-1060										1063

Speed Code
L - Designates 40 ft/min
S - Designates 80 ft/min
H - Designates 120 ft/min
D - Designates dual speed 80/20 ft/min

***Product Code Derivation** - example: TML-3-0135*
T - Top Running
M - Motorized
L - Speed of 40 ft/min
3 - Series Number
01 - Max. Capacity – 1 Ton
35 - Maximum Span – 35 feet

TG—Single Girder Top Running Geared End Trucks

TG end trucks provide similar benefits to the TM truck, but with geared drive. Along with many important features, end truck kits include: two trucks; hand wheel drive; shaft couplers; appropriate drive shaft bearing supports based on span; rubber bumpers; and bridge beam fastener set. All trucks are fully painted. Bridge fabrication prints are also included. As a member of Crane Manufacturers Association of America (CMAA), Harrington builds TG trucks to meet current industry and regulatory codes.

Benefits to count on:

- Versatile design allows hand chain wheel placement anywhere on drive shaft based on application needs.
- Upgrade easily to TM top running motorized design by simply adding drives and reducers.
- Ideal for precision spotting requirements where motorized operation is not necessary.
- Longer or shorter end truck lengths are available—consult factory.

TP—Single Girder Top Running Push End Trucks

TP end trucks provide similar benefits to the top running motorized TM truck, but with push operation. Along with many important features, end truck kits include: two trucks; rubber bumpers; and bridge beam fastener set. All trucks are fully painted. Bridge fabrication prints are also included. As a member of CMAA, Harrington builds TP trucks to meet current industry and regulatory codes.

Benefits to count on:

- Compared to flanged wheel trucks, TP trucks with guide rollers operate easily, particularly in long span or long lift applications.
- Upgrade easily to top running geared TG or motorized TM model—frames are fully machined and prepared for conversion.
- Longer or shorter end truck lengths are available—consult factory.

TG — TOP RUNNING GEARED END TRUCK — SPECIFICATIONS AND DIMENSIONS

Cap. (Tons)	Max. Span (ft)	End Truck Product Code	Wheel Dia. (in)	Sug. Min. Runway Rail (ASCE#)	A Overall Length (in)	B Roller Base (in)	D Wheel Base (in)	J Hand Wheel Offset (in)	N Runway Ctr. Line to Outer Edge of ET Tube (in)	X* Width Beyond Span (in)	Y Top of Rail to Top of End Truck (in)	End Truck Weight (lbs/pr)
1	35	TG-3-0135	3.74	30	61	53	43	9.7	2.1	4.6	7.1	264
	50	TG-3-0150			98	90	80					360
3	35	TG-3-0335	6.10		62	54	43	10.0	3.8			359
	50	TG-3-0350			99	91	80					477
5	35	TG-3-0535		40	62	54	43			4.7	9.2	450
	50	TG-3-0550	8.27		99	90	74	10.3	3.5		9.3	703

*Based on suggested minimum runway rail.
**Standard hand chain drop is 8 ft. from top of runway rail.

TP — TOP RUNNING PUSH END TRUCK — SPECIFICATIONS AND DIMENSIONS

Cap. (Tons)	Max Span (ft)	End Truck Product Code	Wheel Dia. (in)	Sug. Min. Runway Rail (ASCE#)	A Overall Length (in)	B Roller Base (in)	D Wheel Base (in)	N Runway Ctr. Line to Outer Edge of ET Tube (in)	X* Width Beyond Span (in)	Y Top of Rail to Top of End Truck (in)	End Truck Weight (lbs/pr)
1	35	TP-3-0135	3.74	30	61	53	43	2.1	4.6	7.1	242
	45	TP-3-0145			98	90	80				338
2	45	TP-3-0245	6.10		99	91		3.8			454
3	35	TP-3-0335			62	54	43				337
5	35	TP-3-0535		40					4.7	9.2	420

*Based on suggested minimum runway rail.

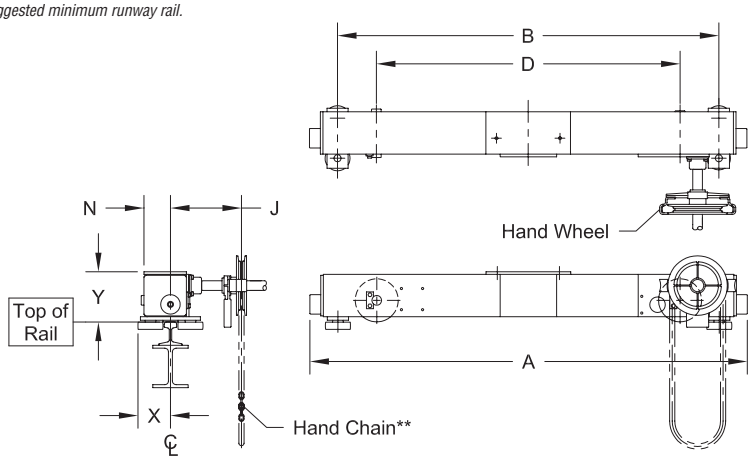

Top Running Geared End Truck

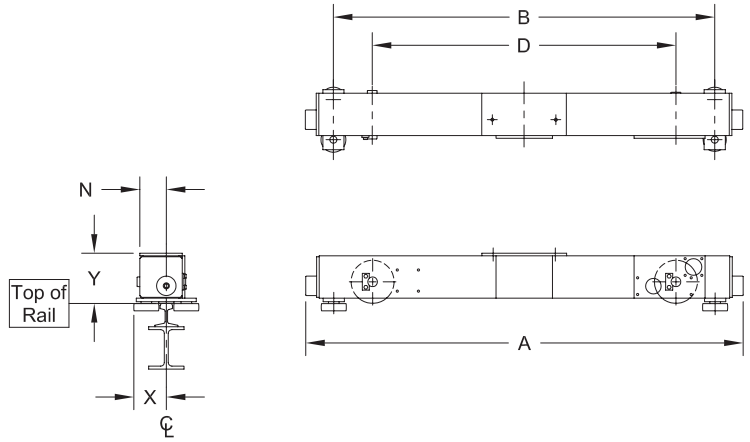

Top Running Manual Push End Truck

UM—Single Girder Underhung Motorized End Trucks

For heavy-duty class "C" single girder crane applications, Harrington underhung motorized end trucks combine superior performance with underhung space savings. Along with a full range of features, end truck kits include: two trucks; two sealed, totally enclosed, non-ventilated (TENV) motors with adjustable D.C. brakes; two helical gear reducers; rubber bumpers; and bridge beam fastener set. All trucks are fully painted. Bridge fabrication prints are also included. As a member of the Crane Manufacturers Association of America (CMAA), Harrington builds UM trucks to meet current industry and regulatory codes.

Benefits to count on:

- Frames fabricated from MC channel provide superior strength, rigidity and structural integrity.
- Reduced wheel friction due to heavy-duty side guide rollers results in smooth crane travel—guide rollers are 3 1/2" O.D. with fixed steel axles.
- Dual tread wheels for use on S or W shaped runway beams—each wheel fitted with 2 deep groove ball bearings, meeting L10 bearing life criteria for class C cranes.
- Runway flange widths up to 6" standard, with wider ranges also available (trucks for patented track available).
- Minimize assembly labor with fully machined frames—girder connection, bracing and collector mounting bracket holes are pre-drilled for easy installation.
- Purchase the right component for the job—dedicated models for capacities of 2, 3, and 5 Ton, with maximum span increments of 35' or 50'.
- Sealed TENV drives with quiet, smooth–operating helical gear reducers.
- Gear reducer is designed for easy field conversion between L and S speeds.
- Drives are designed for crane service, with 30 minute rating and feature cooling fins for efficient heat dissipation.
- Thermal motor protection is standard.
- Externally adjustable D.C. brakes allow controlled deceleration—adjustable up to 50% of rated motor torque.
- Drives and brakes are compatible with Electronic Acceleration Control (EAC) and Variable Frequency Drive (VFD).
- Drives are connectable for 230/460V-3-60 (including dual speed models). Other voltages available.
- Rail sweeps and drop stops are standard.
- Longer or shorter end truck lengths are available—consult factory.

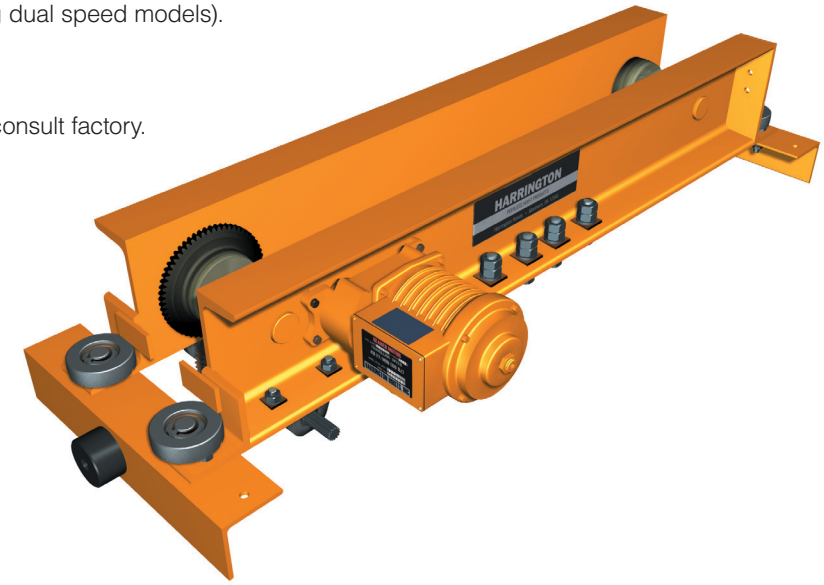

UM — UNDERHUNG MOTORIZED END TRUCK — DIMENSIONS

Cap. (Tons)	Max. Span (ft)	End Truck Product Code	Wheel Dia. (in)	T Flange Range Std. (in)	A Overall Length (in)	B Roller Base (in)	D Wheel Base (in)	M End Truck Frame Width (in)	N Runway Ctr. Line to Outer Edge of ET (in)	R Wheel Running Surf. To Bottom of Truck (in)	X* Width Beyond Span (in)	Y Wheel Running Surface to Upper Most Part of ET (in)	G Motor (in)
2	35	UML/S/H/D-3-0235	4.33	3 - 6	60	53	39	T+8.1	M/2	1.5	11.3 -T/2	6.5	T/2+ 11.9 (L/S) 12.3 (H) 13.3 (D)
	50	UML/S/H/D-3-0250			82	75	61						
3	35	UML/S/H/D-3-0335	4.92		60	53	35	T+8.2					
	50	UML/S/H/D-3-0350			82	75	57						
5	35	UML/S/H/D-3-0535	5.51	4 – 6	60	53	33	T+9.8		1.6		6.8	T/2+ 13.7 (L/S/D) 14.2 (H)
	50	UML/S/H/D-3-0550			82	75	55						

These formulas for Width Beyond Span do not apply for flanges greater than 6 inches. For flanges greater then 6 inches, consult factory.

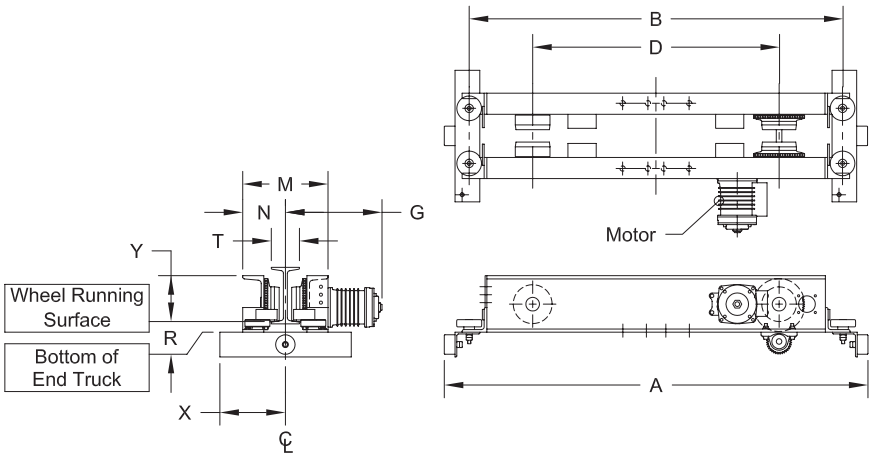

Underhung Motorized End Truck

UM – UNDERHUNG MOTORIZED END TRUCK — SPECIFICATIONS

End Truck Product Code	Speed Codes L and S: One Motor Per End Truck 3 Phase 60 Hz			Speed Code H: One Motor Per End Truck 3 Phase 60 Hz			Speed Code D: One Motor Per End Truck 3 Phase 60 Hz			End Truck Weight (lbs/pr)
	Output (Hp)	Rated Current (amps ea.) @230V	Rated Current (amps ea.) @460V	Output (Hp)	Rated Current (amps ea.) @230V	Rated Current (amps ea.) @460V	Output (Hp)	Rated Current (amps ea.) @230V	Rated Current (amps ea.) @460V	
UML/S/H/D-3-0235	0.33	1.6	1.0	0.5	2.1	1.3	0.33/0.08	1.6/1.1	0.9/0.8	522
UML/S/H/D-3-0250										659
UML/S/H/S-3-0335										543
UML/S/H/D-3-0350										680
UML/S/H/D-3-0535	0.5	2.1	1.3	1.0	3.3	2.0	0.5/0.13	2.0/1.5	1.2/0.9	638
UML/S/H/D-3-0550										795

Speed Code
L - Designates 40 ft/min
S - Designates 80 ft/min
H - Designates 120 ft/min
D - Designates dual speed 80/20 ft/min

***Product Code Derivation** - example: UML-3-0235*
U - Underhung
M - Motorized
L - Speed of 40 ft/min
3 - Series number
02 - Max. Capacity - 2 Ton
35 - Maximum Span - 35 feet

UG—Single Girder Underhung Geared End Trucks

UG end trucks provide similar benefits to the UM truck, but with geared drive. Along with many important features, end truck kits include: two trucks; hand wheel drive; shaft couplers; appropriate drive shaft bearing supports based on span; rubber bumpers; and bridge beam fastener set. All trucks are fully painted. Bridge fabrication prints are also included. As a member of Crane Manufacturers Association of America (CMAA), Harrington builds UG trucks to meet current industry and regulatory codes.

Benefits to count on:

- Versatile design allows hand chain wheel placement anywhere on drive shaft based on application needs.
- Upgrade easily to UM series by simply adding drives and reducers.
- Ideal for precision spotting requirements where motorized operation is not necessary.
- Longer or shorter end truck lengths are available—consult factory.
- Suitable for use on S or W shaped runway beams.

UP—Single Girder Underhung Push End Trucks

UP end trucks provide similar benefits to the UM underhung motorized truck, but for push operation. Along with many important features, end truck kits include: two trucks; rubber bumpers; and bridge beam fastener set. All trucks are fully painted. Bridge fabrication prints are also included. As a member of CMAA, Harrington builds UP trucks to meet current industry and regulatory codes.

Benefits to count on:

- Compared to flanged wheel trucks, UP trucks with guide rollers operate easily, particularly in long span or long lift applications.
- Upgrade easily to underhung geared UG or motorized UM models—frames are fully machined and prepared for conversion.
- Longer or shorter end truck lengths are available—consult factory.
- Suitable for use on S or W shaped runway beams.

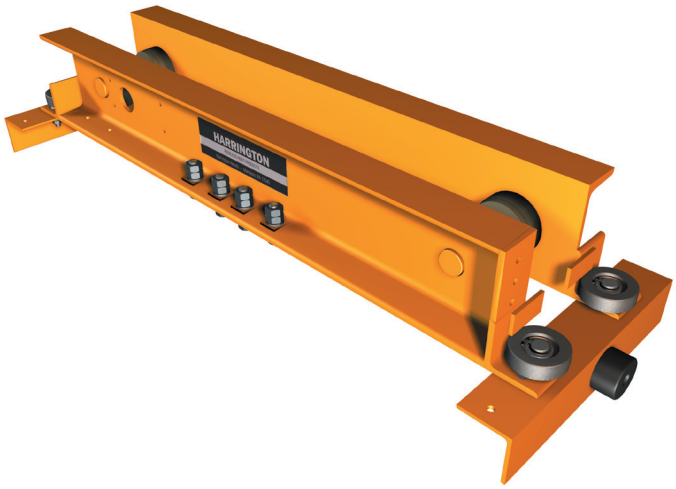

UG — UNDERHUNG GEARED END TRUCK — SPECIFICATIONS AND DIMENSIONS

Cap. (Tons)	Max Span (ft)	End Truck Product Code	Wheel Dia. (in)	T Flange Range Std. (in)	A Overall Length (in)	B Roller Base (in)	D Wheel Base (in)	J Hand Wheel Offset (in)	M End Truck Frame Width (in)	N Runway Ctr. Line to Outer Edge of ET (in)	R Wheel Running Surf to Bottom of Truck (in)	X* Width Beyond Span (in)	Y Wheel Running Surface to Upper Most Part of ET (in)	End Truck Weight (lbs/pr)
2	35	UG-3-0235	4.33	3 – 6	60	53	39	T/2+9.0	T+8.1	M/2	1.5	11.3-T/2	6.5	503
	45	UG-3-0245			82	75	61							640
3	35	UG-3-0335	4.92		60	53	35	T/2+8.9	T+8.2				6.7	529
	45	UG-3-0345			82	75	57							666
5	35	UG-3-0535	5.51	4 – 6	60	53	33	T/2+9.0	T+9.8		1.6		6.8	611
	45	UG-3-0545			82	75	55							768

*These formulas for Width Beyond Span do not apply for flanges greater than 6 inches. For flanges greater than 6 inches, consult factory.
**Standard hand chain drop is 8 ft. from bottom of runway beam.

UP — UNDERHUNG PUSH END TRUCK — SPECIFICATIONS AND DIMENSIONS

Cap. (Tons)	Max. Span (ft)	End Truck Product Code	Wheel Dia. (in)	T Flange Range Std. (in)	A Overall Length (in)	B Roller Base (in)	D Wheel Base (in)	M End Truck Frame Width (in)	N Runway Ctr. Line to Outer Edge of ET (in)	R Wheel Running Surf. to Bottom of Truck (in)	X* Width Beyond Span (in)	Y Wheel Running Surface to Upper Most Part of ET (in)	End Truck Weight (lbs/pr)
2	35	UP-3-0235	4.33	3 – 6	60	53	39	T+8.1	M/2	1.5	11.3 – T/2	6.5	448
	45	UP-3-0245			82	75	61						585
3	35	UP-3-0335	4.92		60	53	35	T+8.2					472
5	35	UP-3-0535	5.51	4 – 6	60	53	33	T+9.8		1.6		6.4	546

* These formulas for Width Beyond Span do not apply for flanges greater than 6 inches. For flanges greater than 6 inches, consult factory

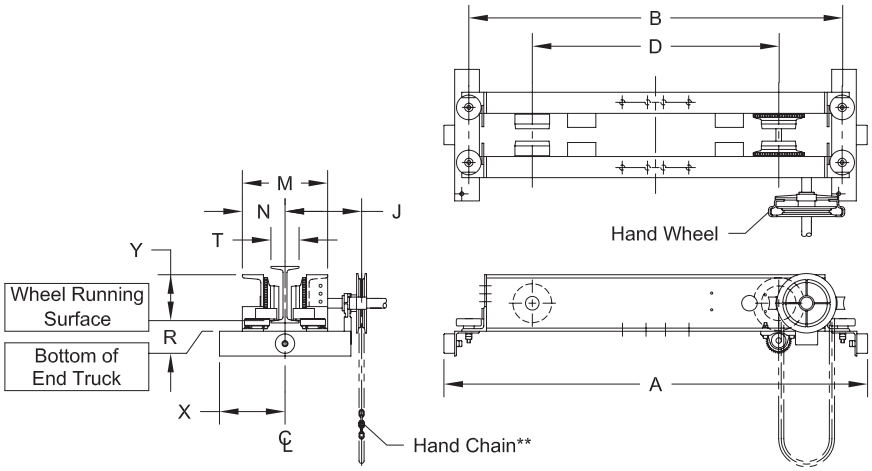

Underhung Geared End Truck

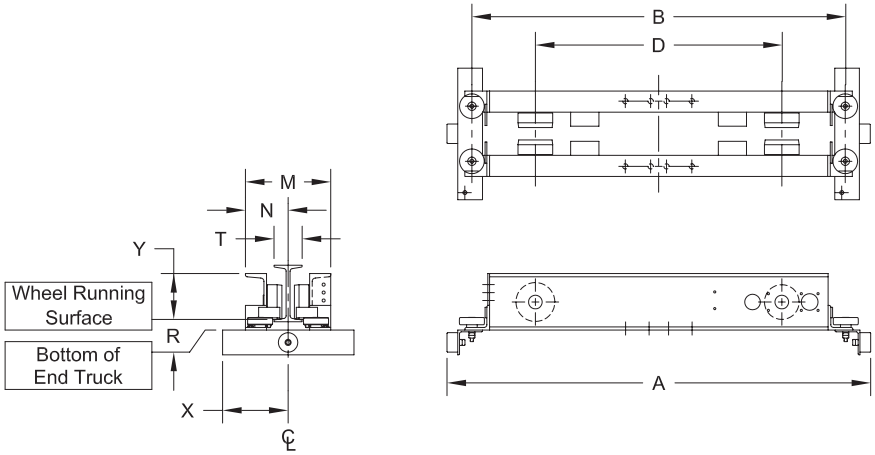

Underhung Push End Truck

MTM—Double Girder Max-E-Lift Top Running Motorized End Trucks

For a compact, double girder configuration with all the benefits of the TM top running motorized single girder design, go with Harrington MTM end trucks. Along with a full range of features, end truck kits include: two trucks; two sealed, totally enclosed non-ventilated (TENV) motors with adjustable D.C. brakes; two helical gear reducers; rubber bumpers; and bridge beam fastener set. All trucks are fully painted. Bridge fabrication prints are also included. As a member of Crane Manufacturers Association of America (CMAA), Harrington builds MTM trucks to meet current industry and regulatory codes.

Benefits to count on:

- Frame fabricated from ASTM A500 structural tube for superior strength, rigidity, and compactness.
- Crane end approach is significantly better than competitive models.
- Standard 36" gauge for 5 Ton and down, 48" on 10 Ton model—other gauges available.
- Purchase the right component for the job—dedicated models for capacities of 1, 3, 5 and 10 Ton with maximum span increments of 35' or 60'.
- Minimize assembly labor with fully machined frames—girder connection and collector mounting bracket holes are drilled and tapped for easy crane assembly.
- Ideal when new head room requirements in an existing application necessitate a new crane, or when head room allows lower building heights for new construction.
- Integrates with most top running, double girder trolley hoists.
- Use with the low profile Harrington Max-E-Lift trolley hoist for the ultimate low-crane profile.
- Sealed TENV drives with quiet, smooth–operating helical gear reducers.
- Gear reducer is designed for easy field conversion between L and S speeds.
- Drives are designed for crane service, with 30 minute rating and feature cooling fins for efficient heat dissipation.
- Externally adjustable D.C. brakes allow controlled deceleration—adjustable up to 50% of rated motor torque.
- Thermal motor protection is standard.
- Drives and brakes are compatible with Electronic Acceleration Control (EAC) and Variable Frequency Drive (VFD).
- Drives are connectable for 230/460V-3-60 (including dual speed models). Other voltages available.
- Rail sweeps and drop stops are standard.
- Longer or shorter end truck lengths are available—consult factory.

Also available in geared models.
Consult factory for specs.

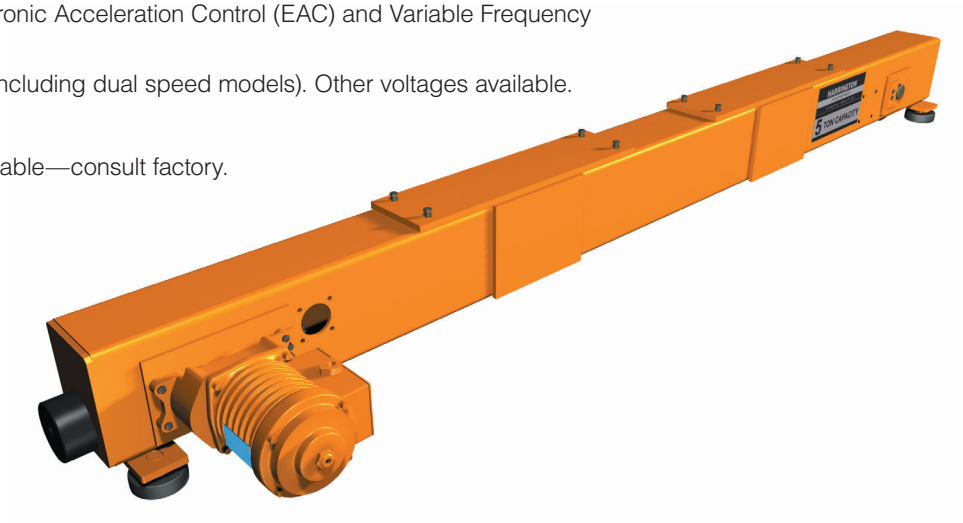

MTM — MAX-E-LIFT TOP RUNNING MOTORIZED END TRUCK — DIMENSIONS

Cap. (Tons)	Max. Span (ft)	End Truck Product Code	Wheel Dia. (in)	Sug. Min. Runway Rail (ASCE#)	A Overall Length (in)	B Roller Base (in)	D Wheel Base (in)	K Beam Gauge (in)	N Runway Ctr. Line to Outer Edge of ET Tube (in)	X* Width Beyond Span (in)	Y Top of Rail to Top of End Truck (in)	G Motor (in)
1	35	MTML/S/H/D-3-0135	3.74	30	72	64	54	36	2.1	4.6	7.1	12.7 (L/S) 13.1 (H) 14.0 (D)
	60	MTML/S/H/D-3-0160			111	103	93					
3	35	MTML/S/H/D-3-0335	6.10		75	67	56		3.8			13.0 (L/S) 13.4 (H) 14.3 (D)
	60	MTML/S/H/D-3-0360			112	104	93					
5	35	MTML/S/H/D-3-0535		40	75	67	56			4.7	9.2	
	60	MTML/S/H/D-3-0560	8.27		112	103	87		3.5		9.3	15.0 (L/S/D) 15.4 (H)
10	35	MTML/S/H/D-3-1035	9.84	60	93	83	67	48	5.3	6.3	11.3	17.4 (L/S/D) 18.7 (H)
	60	MTML/S/H/D-3-1060			113	103	87					

*Based on suggested minimum runway rail.

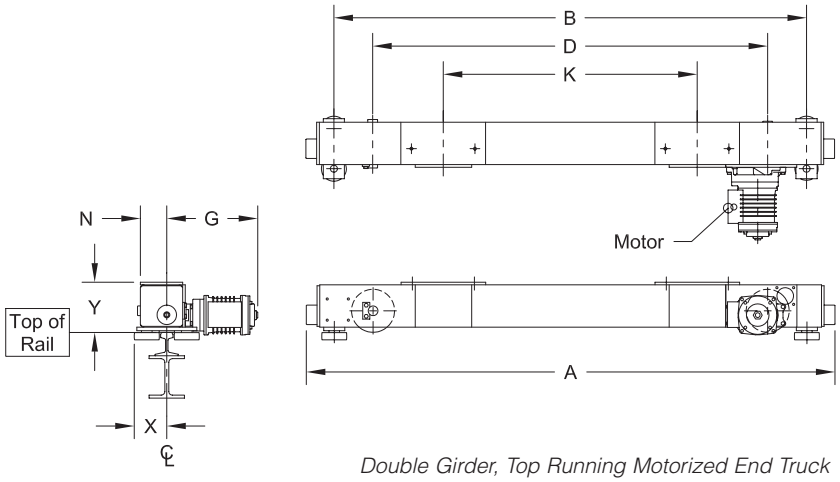

Double Girder, Top Running Motorized End Truck

MTM — MAX-E-LIFT TOP RUNNING MOTORIZED END TRUCK — SPECIFICATIONS

End Truck Product Code	Speed Codes L and S — One Motor Per End Truck 3 Phase 60 Hz			Speed Code H — One Motor Per End Truck 3 Phase 60 Hz			Speed Code D — One Motor Per End Truck 3 Phase 60 Hz			End Truck Weight (lbs/pr)
	Output (Hp)	Rated Current (amps ea.) @230V	Rated Current (amps ea.) @460V	Output (Hp)	Rated Current (amps ea.) @230V	Rated Current (amps ea.) @460V	Output (Hp)	Rated Current (amps ea.) @230V	Rated Current (amps ea.) @460V	
MTML/S/H/D-3-0135	0.33	1.6	1.0	0.5	2.1	1.3	0.33/0.08	1.6/1.1	0.9/0.8	340
MTML/S/H/D-3-0160										441
MTML/S/H/D-3-0335										526
MTML/S/H/D-3-0360										647
MTML/S/H/D-3-0535										648
MTML/S/H/D-3-0560	0.5	2.1	1.3	1.0	3.3	2.0	0.5/0.13	2.0/1.5	1.2/0.9	818
MTML/S/H/D-3-1035	1.0	3.3	2.0	2.0	5.8	3.1	1.0/0.25	3.7/2.1	2.3/1.4	1,105
MTML/S/H/D-3-1060										1,202

Speed Code
L - Designates 40 ft/min
S - Designates 80 ft/min
H - Designates 120 ft/min
D - Designates dual speed 80/20 ft/min

***Product Code Derivation** - example: MTML-3-0135*
1st M - Max-E-Lift Style
T - Top Running
2nd M - Motorized
L - Speed of 40 ft/min
3 - Series Number
01 - Max. Capacity – 1 Ton
35 - Maximum Span – 35 feet

MUM—Double Girder Max-E-Lift Underhung Motorized End Trucks

Harrington MUM end trucks offer the same benefits of the UM underhung motorized single girder series, but in a compact, double girder configuration. Unique for double girder cranes, these end trucks offer the dimensional advantage of an underhung crane combined with a top running trolley. Along with many important features, end truck kits include: two end trucks; two sealed, totally enclosed, non-ventilated (TENV) motors with adjustable electric brakes; two helical gear reducers; rubber bumpers; and bridge beam fastener set. All trucks are fully painted. Bridge fabrication prints are also included. As a member of Crane Manufacturers Association of America (CMAA), Harrington builds MUM trucks to meet current industry and regulatory codes.

Benefits to count on:

- Unique design combining double girder underhung crane with top running trolley hoist increases high hook and minimizes crane profile.
- Purchase the right component for the job—dedicated models for capacities of 2, 3, and 5 Ton, with maximum span increments of 35' or 50'.
- Offers significantly better crane end approach than most double girder cranes.
- Minimize assembly labor with fully machined frames—girder connection and collector mounting bracket holes are pre-drilled for easy crane assembly.
- Standard 36" gauge—other gauges available.
- Integrates with most top running, double girder trolley hoists.
- Specially designed to accept the Harrington Max-E-Lift low profile trolley hoist.
- Sealed TENV drives with quiet, smooth-operating helical gear reducers.
- Gear reducer is designed for easy field conversion between L and S speeds.
- Drives are designed for crane service, with 30 minute rating and feature cooling fins for efficient heat dissipation.
- Externally adjustable D.C. brakes allow controlled deceleration—adjustable up to 50% of rated motor torque.
- Thermal motor protection is standard.
- Drives and brakes are compatible with Electronic Acceleration Control (EAC) and Variable Frequency Drive (VFD).
- Drives are connectable for 230/460V-3-60 (including dual speed models). Other voltages available.
- Rail sweeps and drop stops are standard.
- Longer or shorter end truck lengths are available—consult factory.

Also available in geared models.
Consult factory for specs.

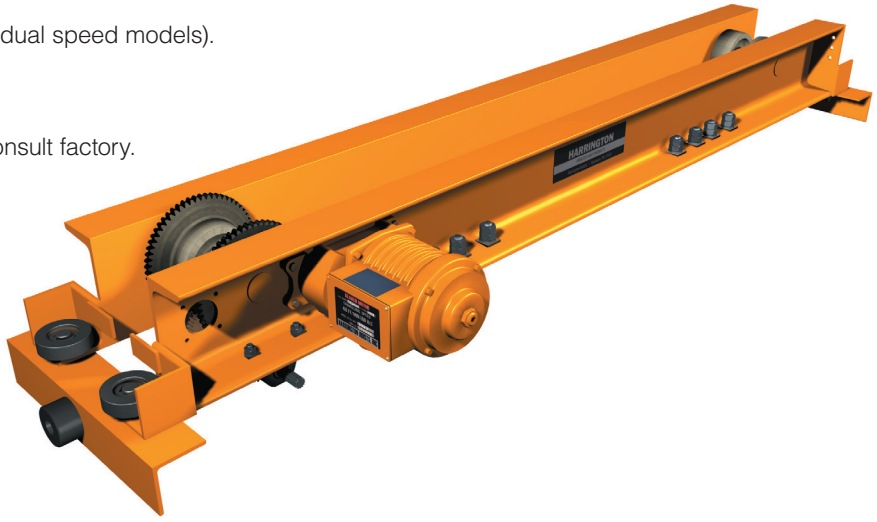

MUM — MAX-E-LIFT UNDERHUNG MOTORIZED END TRUCK — DIMENSIONS

Cap. (Tons)	Max. Span (ft)	End Truck Product Code	Wheel Dia. (in)	T Flange Range Std. (in)	A Overall Length (in)	B Roller Base (in)	D Wheel Base (in)	M End Truck Frame Width (in)	N Runway Ctr. Line to Outer Edge of ET (in)	R Wheel Running Surf. to Bottom of Truck (in)	X* Width Beyond Span (in)	Y Wheel Running Surface to Upper Most Part of ET (in)	G Motor (in)
2	35	MUML/S/H/D-3-0235	4.33	3 – 6	87	80	66	T+8.1	M/2	1.5	11.3 – T/2	6.5	T/2+ 11.9 (L/S) 12.3 (H) 13.3 (D)
	50	MUML/S/H/D-3-0250			99	92	78						
3	35	MUML/S/H/D-3-0335	4.92		91	84	66	T+8.2					
	50	MUML/S/H/D-3-0350			103	96	78						
5	35	MUML/S/H/D-3-0535	5.51	4 – 6	95	88	68	T+9.8		1.6		6.8	T/2+ 13.7 (L/S/D) 14.2 (H)
	50	MUML/S/H/D-3-0550			107	100	80						

These formulas for Width Beyond Span do not apply for flanges greater than 6 inches. For flanges greater than 6 inches, consult factory.

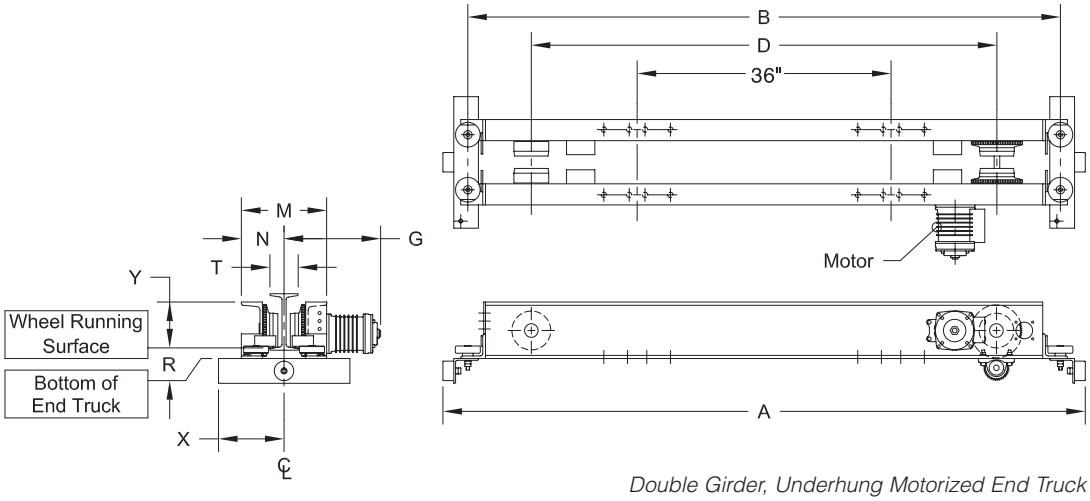

Double Girder, Underhung Motorized End Truck

MUM — MAX-E-LIFT UNDERHUNG MOTORIZED END TRUCK — SPECIFICATIONS

End Truck Product Code	Speed Codes L and S — One Motor Per End Truck 3 Phase 60 Hz: Output (Hp)	Rated Current (amps ea.) @230V	Rated Current (amps ea.) @460V	Speed Code H — One Motor Per End Truck 3 Phase 60 Hz: Output (Hp)	Rated Current (amps ea.) @230V	Rated Current (amps ea.) @460V	Speed Code D — One Motor Per End Truck 3 Phase 60 Hz: Output (Hp)	Rated Current (amps ea.) @230V	Rated Current (amps ea.) @460V	End Truck Weight (lbs/pr)
MUML/S/H/D-3-0235	0.33	1.6	1.0	0.5	2.1	1.3	0.33/0.08	1.6/1.1	0.9/0.8	690
MUML/S/H/D-3-0250										765
MUML/S/H/D-3-0335										736
MUML/S/H/D-3-0350										811
MUML/S/H/D-3-0535	0.5	2.1	1.3	1.0	3.3	2.0	0.5/0.13	2.0/1.5	1.2/0.9	888
MUML/S/H/D-3-0550										973

Speed Code
L - Designates 40 ft/min
S - Designates 80 ft/min
H - Designates 120 ft/min
D - Designates dual speed 80/20 ft/min

***Product Code Derivation** - example: MUML-3-0235*
1st M - Max-E-Lift Style
U - Underhung
2nd M - Motorized
L - Speed of 40 ft/min
3 - Series Number
02 - Max. Capacity – 2 Ton
35 - Maximum Span – 35 feet

Convertible Push End Trucks
HPC 500 Series

For assembly, maintenance, machining or general industrial operations, HPC 500 series end truck kits offer a medium duty, push end truck design that can be assembled for either top running or underhung cranes. Kits include: two end trucks; rubber bumpers; bridge beam fastener set; trolley stops; beam fabrication instructions; and assembly and installation guide.

Benefits to count on:

- Fully machined frames are convertible for either top running or underhung use.
- Frames are fabricated from structural steel for optimal strength and rigidity.
- Wheels are cast iron and precision machined to roll smoothly on either flat or tapered flanges. Each wheel features a sealed deep groove ball bearing.
- All-bolted for ease of assembly.
- Drop stops and rail sweeps standard.
- Longer or shorter end truck lengths are available—consult factory.

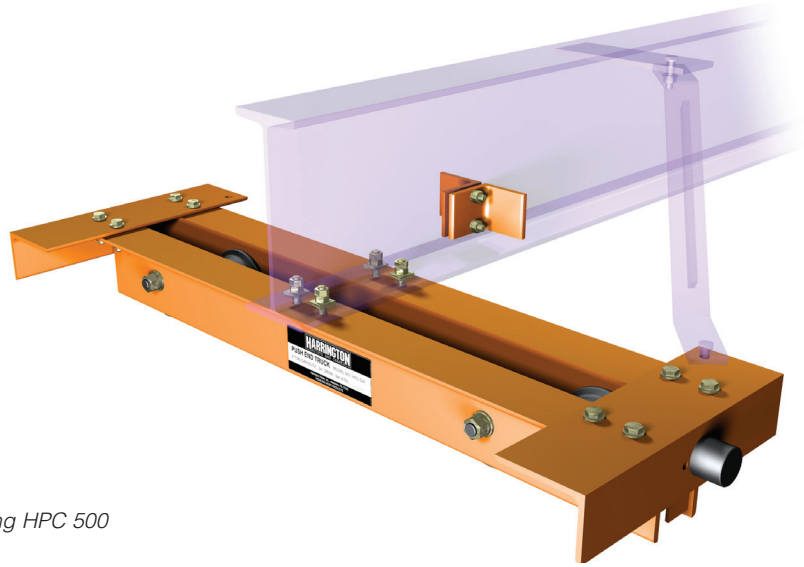

Top Running HPC 500

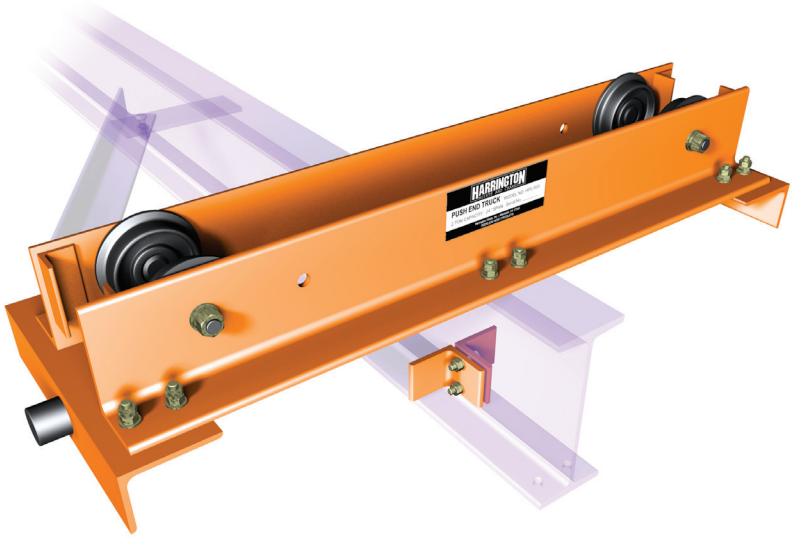

Underhung HPC 500

HPC 500 — CONVERTIBLE PUSH END TRUCK — SPECIFICATIONS AND DIMENSIONS

Cap. (Tons)	Max. Span (ft)	End Truck Product Code	T* Flange or Rail Head Width (in)		D** (in)	M** End Truck Frame Width (in)	N Runway Ctr. Line to Outer Edge of ET (in)	Q Wheel Tread Dia. (in)	X Width Beyond Span (in)	Y Wheel Running Surface to Bridge Beam (in)	R Wheel Running Surface to Bridge Beam (in)	End Truck Weight (lbs/pr)
			Top Running	Under-hung								
1/2	24	HPC505	1.5-6	3-6	T + 4-3/4	T + 7.3	M/2	3.12	10 1/8 – T/2	4.3	1.2	156
1		HPC510				T + 8.3		4.00		5.3	1.2	214
2		HPC520		3.3-6				4.88		5.9	1.1	270

*Consult customer service for widths or flanges greater than 6 inches.
**Formula shown is for S beams & ASCE rail—add 1/4 inch for W beams and rectangular bar.

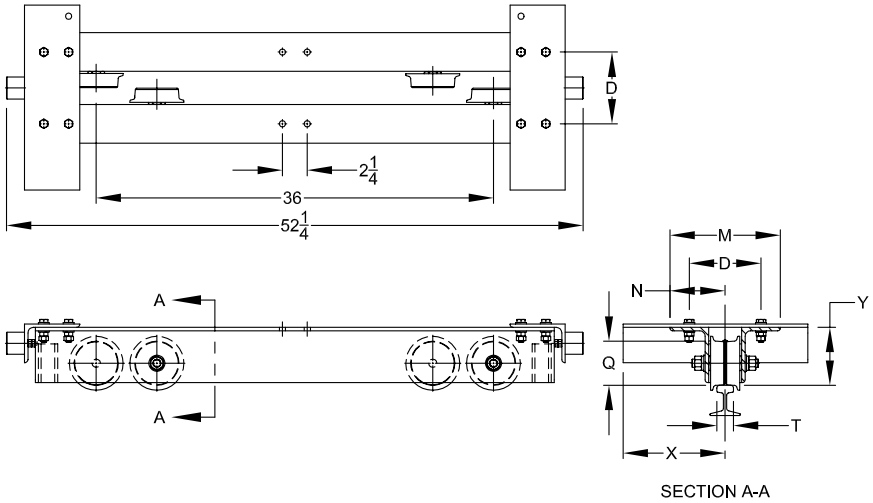

HPC 500 Top Running End Trucks
Dimensions in inches

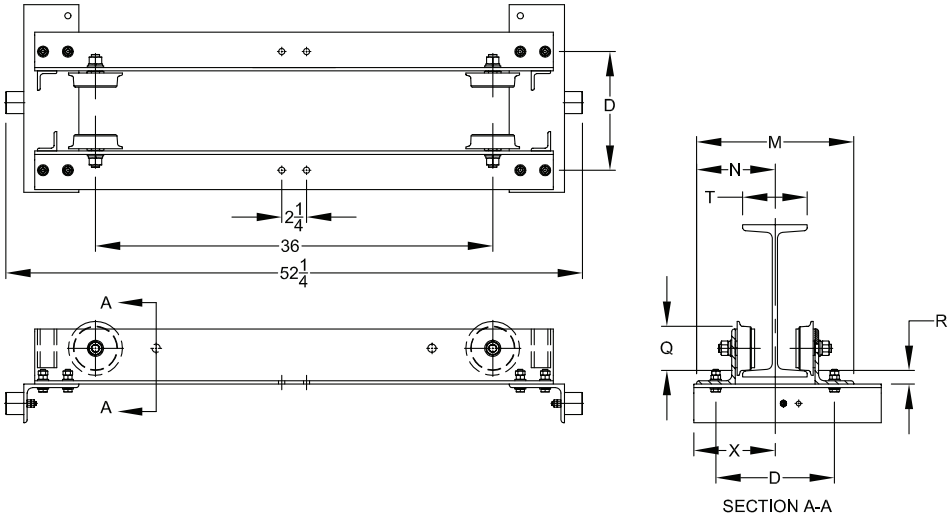

HPC 500 Underhung End Trucks
Dimensions in inches

Harrington Beam Accessory Kits

Provides the convenience of pre-fabricated bracing and bridge beam accessories.

- For use with any Harrington end truck—specify end truck model when ordering.
- Kit includes: trolley stops; bridge beam to truck bracing; bridge beam mounting plates; angle festoon brackets; control panel mounting bracket; and necessary hardware.
- Fits S and W shaped bridge beams—specify bridge beam size and crane span when ordering.

See illustrations, facing page.

Options and Accessories: Consult Factory

- Anti kick-up rollers for underhung bridge cranes with cantilevered end(s).
- Special dimensional requirements for end trucks.
- Collector mounting bracket with 1" square bar.
- Special control circuit voltages for control panels.
- Special voltages for end truck drives.
- Underhung end trucks capable of operating on patented track.

Compliance

In order to meet requirements of the Crane Manufacturers Association of America (CMAA), the National Electric Code (NEC) and the American National Standards Institute (ANSI/ASME), Harrington components include:

- Thermal motor protection for all motors.
- Rubber bumpers for Series 3 and HPC 500 end trucks.
- Rubber bumpers and drop stops for motorized trolley hoists.
- Hoists load tested to 125% of rated capacity.
- Drop stops for all end trucks.
- Rail sweeps for all end trucks.
- Recommended bridge beams comply with CMAA.

Harrington beam accessory kits:

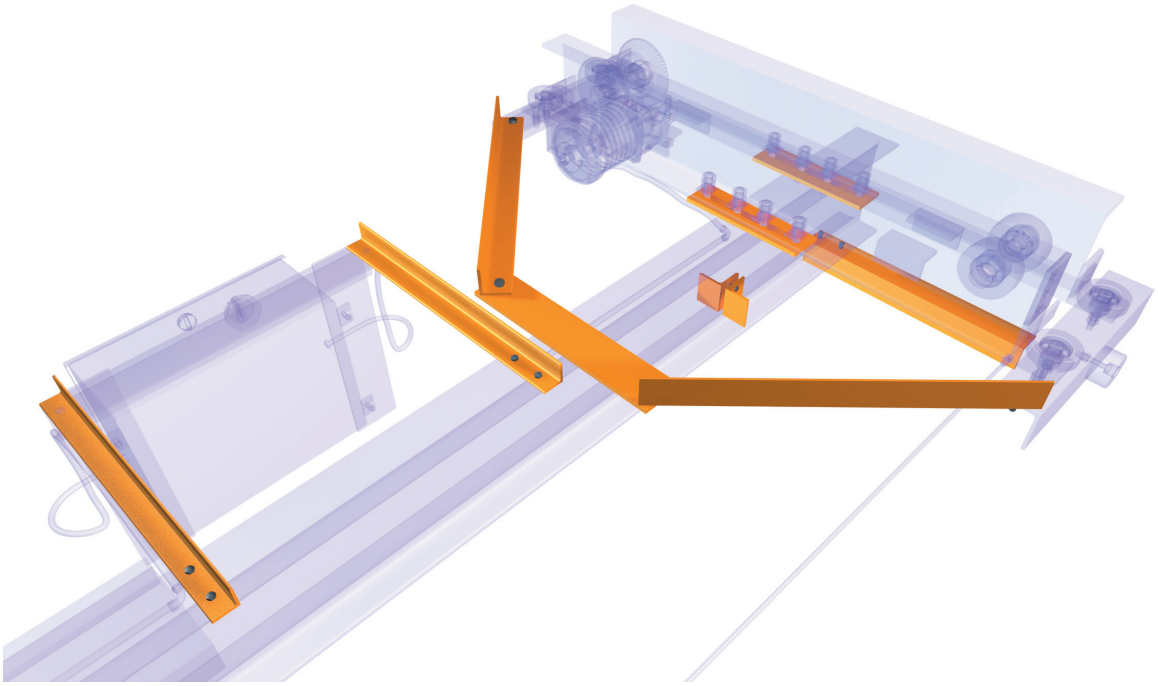

Underhung Beam Accessory Kit

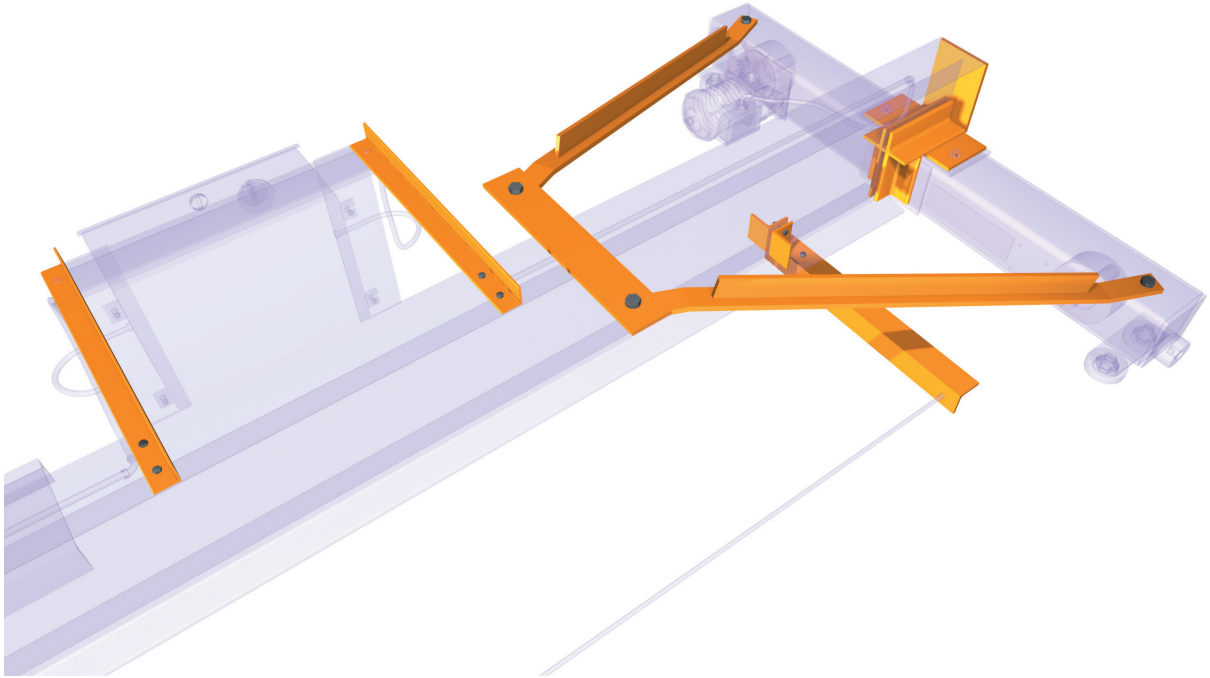

Top Running Beam Accessory Kit

Bridge Beam Selection Charts

SERIES 3 — SINGLE GIRDER BEAM SIZES

Bridge beam sizing is based on Harrington chain hoist products' weights and speeds

Maximum Allowable Span (ft)	Capacity (Tons)						
	1/2	1	2	3	5	8	10
10	S8x18.4	S8x18.4	S10x25.4	S12x31.8	S12x40.8	W18x71	W21x93
15	S8x18.4	S8x18.4	S10x25.4	S12x40.8	S15x50	W21x83	W18x106
20	S8x18.4	S10x25.4	S12x31.8	S15x42.9	S15x42.9 C8x11.5	W21x93	W18x119
25	S10x25.4	S10x25.4	S12x31.8 C8x11.5	S15x42.9 C8x11.5	S15x42.9 C10x15.3	W24x103	W24x103 C12x20.7
30	S10x25.4	S12x31.8	S15x42.9	S15x42.9 C10x15.3	W16x77	W24x103	W27x129
35	S12x31.8	S15x42.9	S15x42.9 C8x11.5	W16x67	W21x83	W27x114	W30x148
40	S15x42.9	S15x42.9 C8x11.5	W18x60	W18x71	W21x83	W27x114 C12x20.7	W27x129 C15x33.9
45	S15x42.9 C8x11.5	W16x57	W18x71	W18x76	W24x94	W27x114 C15x33.9	W30x148 C15x33.9
50	W16x40	W18x60	W18x76	W21x83	W27x102	W30x124 C15x33.9	W30x148 C15x33.9
55	W16x57	W16x67	W21x83	W24x94	W27x114	W30x132 C15x33.9	W30x148 C15x33.9
60	W16x67	W18x76	W21x93	W27x114	W30x116 C15x33.9	W33x141 C15x33.9	W33x169 C15x33.9

Note: Above channel caps are span less 10'0" for overall length.
The beam sizes listed in this chart are for indoor use only. For outdoor applications, consult Customer Service.

HPC RECOMMENDED BRIDGE BEAMS — ELECTRIC HOIST

Bridge beam sizing is based on Harrington products' weights and speeds

1. **Includes 15% allowance for Electric Hoist load factor.**
2. **Based on Harrington's electric chain hoist product.**
3. **For spans greater than 10 ft, braces between end truck and bridge beam are recommended.**

Capacity (Tons)	Maximum Allowable Span (ft)			
	10	15	20	24
1/2	S8x18.4	S8x18.4	S8x18.4	S10x25.4
1	S8x18.4	S8x18.4	S10x25.4	S10x25.4
2	S10x25.4	S10x25.4	S12x31.8	S12x31.8 C8x11.5

The beam sizes listed in this chart are for indoor use only. For outdoor applications, consult Customer Service.

Bridge Crane Control Panels

All motorized bridge cranes require a master panel to control bridge crane functions. Harrington control panels are completely pre-wired and tested, and ready to mount on bridge beam. Standard panel is NEMA 1 rated and includes:

Through-the-door fused disconnect switch *is OSHA compliant lock-out capable*

Main line contactor *allows the crane to be turned on and off from the pendant*

Reversing contactor *provides bridge crane forward and reverse control*

Thermal overload relay *(auto-reset) protects crane drives from overheating*

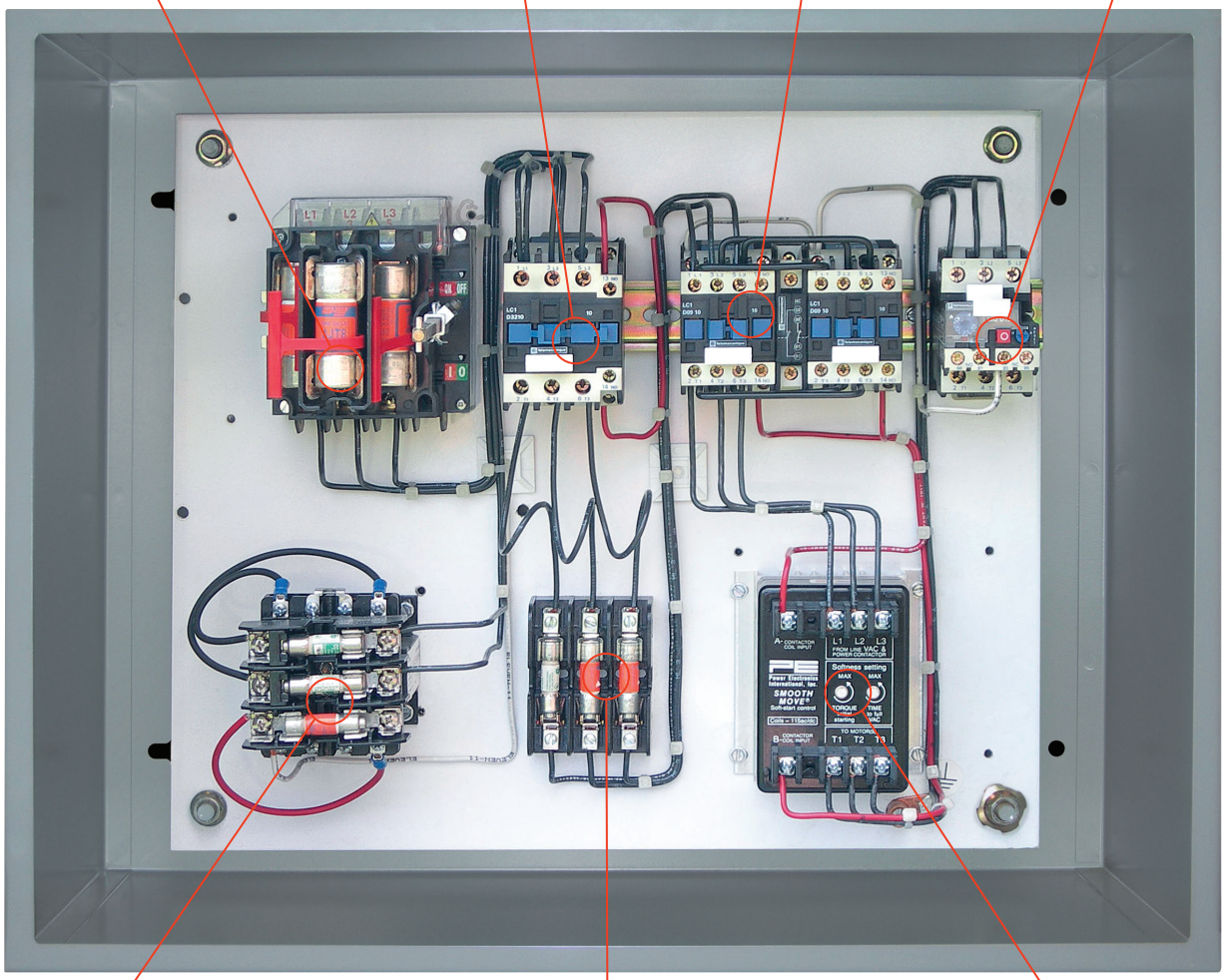

Control transformer *(with primary and secondary fusing) provides low voltage control circuit for pendant*

Fusing for crane drives *protects motors and are NEC compliant*

Electric Acceleration Control (EAC) *allows easy field adjustment of crane acceleration and helps minimize load swing*

NEMA 4 bridge crane control panels available upon request.

Bridge Crane Control Panels

These panels are for use with all Harrington Series 3 motorized end trucks and are NEC compliant for overhead bridge cranes. All panels include bridge mounting bracket and wiring diagram. Specify voltage when ordering.

Standard Panel

Single Speed and Dual Speed Models with EAC—700, 800, 900 Series

Standard features include:

Lock-out compatible through-the-door manual disconnect switch with system fusing, 110 volt control circuit transformer with primary and secondary fusing, mainline contactor, mechanically interlocked reversing contactor, time and torque adjustable Electronic Acceleration Control (EAC), branch circuit fusing for bridge, auto-reset thermal overload relay, and bottom hinged door.

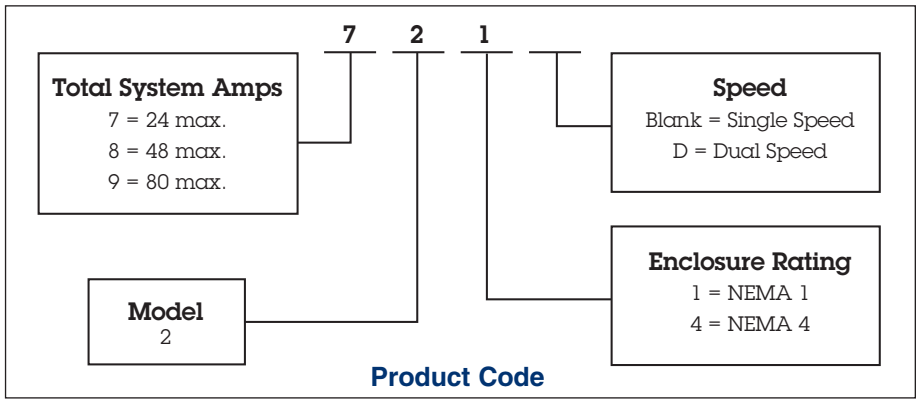

Optional Panel

Variable Frequency Drive Models—2000 Series

Standard features include:

Lock-out compatible through-the-door manual disconnect switch with system fusing, 110 volt control circuit transformer with primary and secondary fusing, mainline contactor, Variable Frequency Drive (VFD), brake relay, branch circuit fusing for bridge, auto-reset thermal overload relay, and bottom hinged door.

These panels can be used for dual and multiple speed applications, infinitely variable speed applications and programmed acceleration/deceleration control. VFD comes pre-loaded with many easy-to-select programs to fit virtually any crane control application, and includes fault-code troubleshooting.

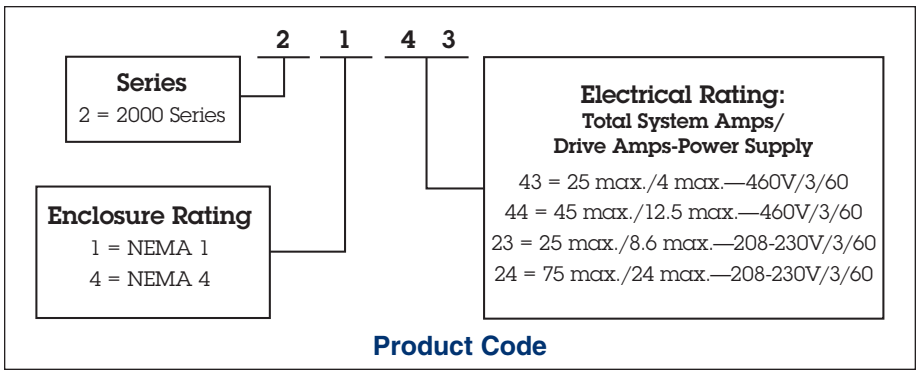

Complete Product Offering

Over the years, Harrington has continued to respond to the needs of our customers by further expanding our product offerings. In addition to the many models described in this catalog, our full series of product catalogs, as shown below, will provide you with all of the information you will need to answer questions, specify a product and place an order. For catalog copies or answers to specific product questions, please contact our Customer Service Department by calling 800-233-3010 (Manheim, PA) or 800-317-7111 (Corona, CA) or e-mail customerservice@harringtonhoists.com

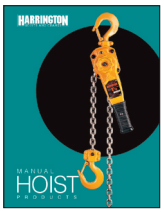

Manual Hoist Products Catalog

Refer to this Harrington catalog for detailed information on the following:

- Lever hoists
- Hand chain hoists
- Hoist and trolley combinations
- Low headroom trolley hoists
- Push and geared trolleys
- Hoist load testers

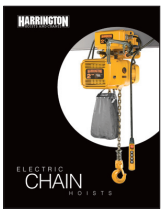

Electric Chain Hoists Catalog

Refer to this Harrington catalog for detailed information on the following:

- Three phase electric chain hoists and trolleys
- Single phase electric chain hoists and trolleys
- Ergonomic electric chain hoists

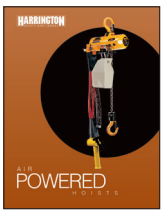

Air Powered Hoists Catalog

Refer to this Harrington catalog for detailed information on the following:

- Compact Mini-Cat with pendant, cord and manipulator controls
- Air hoists with pendant and cord controls
- Air trolleys

Electric Wire Rope Hoists Catalog

Refer to this Harrington catalog for detailed information on the following:

- Deck/base mounted or lug suspended hoists
- Standard headroom trolley hoists
- Ultra-low headroom trolley hoists

Complete Cranes Catalog

Refer to this Harrington catalog for detailed information on the following:

- Heavy-duty Class C single girder top running and underhung cranes
- Heavy-duty Class C double girder top running and underhung cranes
- Medium-duty top running and underhung push cranes
- Crane control panels

CONTACT YOUR NEARBY
HARRINGTON DISTRIBUTOR

Warranty

All products sold by Harrington Hoists, Inc. are warranted to be free from defects in material and workmanship from date of shipment by Harrington for the following periods:

Manual Hoists & Trolleys—2 years
NER/ER Enhanced Features Models—3 years
NER/ER, SNER and ED Electric Hoists, Air Hoists & Trolleys, Crane Components—1 year
Spare/Replacement Parts—1 year
NER/ER "The Guardian" Electromagnetic Smart Technology Brake—10 years

The product must be used in accordance with manufacturer's recommendations and must not have been subject to abuse, lack of maintenance, misuse, negligence, or unauthorized repairs or alterations.

Should any defect in material or workmanship occur during the above time period in any product, as determined by Harrington Hoists' inspection of the product, Harrington Hoists, Inc. agrees, at its discretion, either to replace (not including installation) or repair the part or product free of charge and deliver said item F.O.B. Harrington Hoists, Inc. place of business to customer.

Customer must obtain a Return Goods Authorization as directed by Harrington or Harrington's published repair center prior to shipping product for warranty evaluation. An explanation of the complaint must accompany the product. Product must be returned freight prepaid. Upon repair, the product will be covered for the remainder of the original warranty period. If it is determined there is no defect, or that the defect resulted from causes not within the scope of Harrington's warranty, the customer will be responsible for the costs of returning the product.

Harrington Hoists, Inc. disclaims any and all other warranties of any kind expressed or implied as to the product's merchantability or fitness for a particular application. Harrington will not be liable for death, injury to persons or property, or for incidental, contingent, special or consequential damages, loss or expense arising in connection with the use or inability whatever, regardless of whether damage, loss, or expense results from any act or failure to act by Harrington, whether negligent or willful, or from any other reason.

HARRINGTON
HOISTS AND CRANES

www.harringtonhoists.com

Harrington Hoists, Inc.
401 West End Ave., Manheim, PA 17545
717-665-2000 / 800-233-3010
Fax: 717-665-2861

Harrington Hoists, Inc.—Western Division
2341 Pomona Rd., No. 103, Corona, CA 92880-6973
951-279-7100 / 800-317-7111
Fax: 951-279-7500

Item No. C-Components

Specifications and dimensions are subject to change without notice.