SATURN ENGINEERING

LOW HEADROOM HOISTS & DRIVE TRACTORS

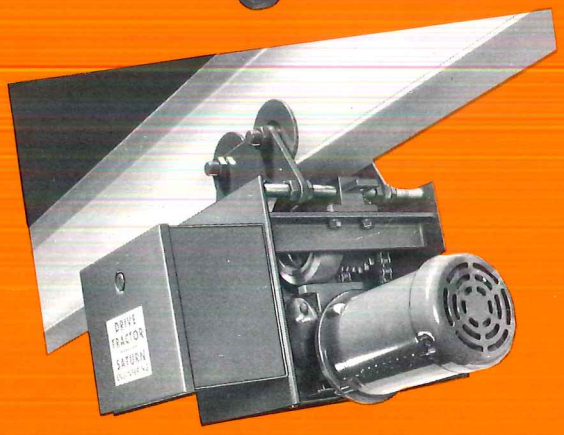

SATURN ENGINEERING

THE LEADER IN LOW HEADROOM HOISTS

LOW HEADROOM SERIES

TWO PART DOUBLE REEVING

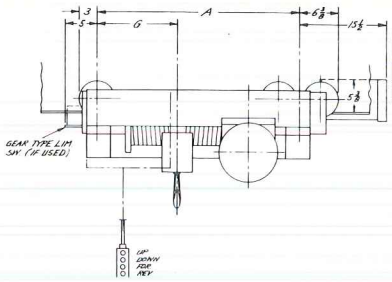

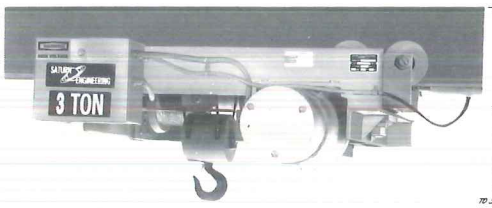

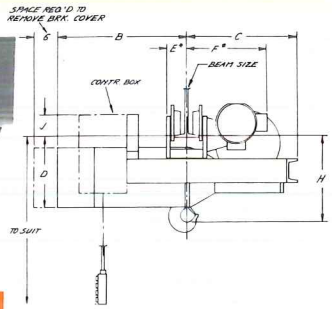

NOTE: LONGER LIFTS AVAILABLE ON EE SERIES TO 44' AND FE SERIES T0 59'

LOW HEADROOM MONORAIL HOISTS
TWO PART DOUBLE REEVING

CATALOG NO.	CAP.	SPEED	LIFT*	CABLE	MOTOR	WT.	HEAD-ROOM	DIMENSIONS A	B	C	D	E	F*	G	J
EE2-2014MT	2000	20	14	1/4	2@1200	600	11"	32 1/4	21	19	11 3/4	2 3/8	11 3/4	12 1/4	2 3/8
EE2-2022MT	2000	20	22	1/4	2@1200	675	11"	37 1/4	21	19	11 3/4	2 3/8	11 3/4	14 3/4	2 3/8
EE2-3014MT	2000	30	14	1/4	3@1800	600	11"	32 1/4	18	19	11 1/4	2 3/8	11 3/4	12 1/4	2 3/8
EE2-3022MT	2000	30	22	1/4	3@1800	675	11"	37 1/4	18	19	11 1/4	2 3/8	11 3/4	14 3/4	2 3/8
EE3-2014MT	3000	20	14	1/4	3@1200	650	11"	32 1/4	21	19	11 3/4	2 3/8	11 3/4	12 1/4	2 3/8
EE3-2022MT	3000	20	22	1/4	3@1200	725	11"	37 1/4	21	19	11 3/4	2 3/8	11 3/4	14 3/4	2 3/8
EE3-3014MT	3000	30	14	1/4	5@1800	600	11"	32 1/4	18	19	11 1/4	2 3/8	11 3/4	12 1/4	2 3/8
EE3-3022MT	3000	30	22	1/4	5@1800	675	11"	37 1/4	18	19	11 1/4	2 3/8	11 3/4	14 1/4	2 3/8
FE4-2014MT	4000	20	14	1/4	4@1200	675	14"	34	21 1/2	21	11 5/8	2 3/8	11 3/4	13 1/2	3 3/8
FE4-2022MT	4000	20	22	1/4	4@1200	750	14"	38 1/2	21 1/2	21	11 5/8	2 3/8	11 3/4	15 3/4	3 3/8
FE4-3014MT	4000	30	14	1/4	6@1800	675	14"	34	21 1/2	21	11 5/8	2 3/8	11 3/4	13 1/2	3 3/8
FE4-3022MT	4000	30	22	1/4	6@1800	750	14"	38 1/4	21 1/2	21	11 5/8	2 3/8	11 3/4	15 3/4	3 3/8
FE6-2014MT	6000	20	14	5/16	6@1200	675	14"	34	21 1/2	21	11 5/8	2 3/8	11 3/4	13 1/2	3 3/8
FE6-2022MT	6000	20	22	5/16	6@1200	750	14"	38 1/2	21 1/2	21	11 5/8	2 3/8	11 3/4	15 3/4	3 3/8
FE6-3014MT	6000	30	14	5/16	10@1800	675	14"	34	21 1/2	21	11 5/8	2 3/8	11 3/4	13 1/2	3 3/8
FE6-3022MT	6000	30	22	5/16	10@1800	750	14"	38 1/2	21 1/2	21	11 5/8	2 3/8	11 3/4	15 3/4	3 3/8

*TO DIMENSION E & F ADD HALF WIDTH OF FLANGE HOIST RIDES ON.
NOTE: LOW HEADROOM MONORAIL HOIST CANNOT NEGOTIATE ANY CURVE.

MAXIMUM FLANGE WIDTH 6".
15 FPM LIFTING SPEEDS ALSO AVAILABLE ON EE AND FE SERIES.

LOW HEADROOM SERIES

FOUR PART SINGLE REEVED

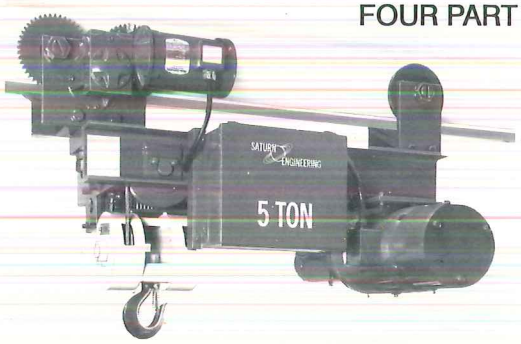

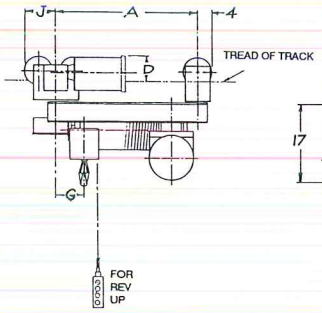

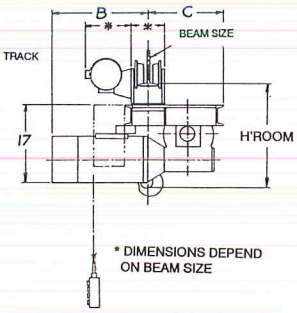

NOTE: LONGER LIFTS AVAILABLE ON ED AND FD SERIES T0 50'

CATALOG NO.	CAP.	SPEED	LIFT*	CABLE	MOTOR	H'ROOM	A	B	C	D	G	J	WT
ED4-1015MT	4000	10	15	1/4	2@1200	18"	27 7/8	21	16	5 1/8	5 5/8	6 3/8	700
ED4-1022MT	4000	10	22	1/4	2@1200	18"	32 7/8	21	16	5 1/8	5 5/8	6 3/8	775
ED4-1515MT	4000	15	15	1/4	3@1800	18"	27 7/8	20	16	5 1/8	5 5/8	6 3/8	700
ED4-1522MT	4000	15	22	1/4	3@1800	18"	32 7/8	20	16	5 1/8	5 5/8	6 3/8	775
ED6-1015MT	6000	10	15	5/16	3@1200	18"	27 7/8	21	16	5 1/8	5 5/8	6 3/8	700
ED6-1022MT	6000	10	22	5/16	3@1200	18"	32 7/8	21	16	5 1/8	5 5/8	6 3/8	775
ED6-1515MT	6000	15	15	5/16	5@1800	18"	27 7/8	20	16	5 1/8	5 5/8	6 3/8	700
ED6-1522MT	6000	15	22	5/16	5@1800	18"	32 7/8	20	16	5 1/8	5 5/8	6 3/8	775
FD10-1014MT	10000	10	14	3/8E	5@1200	25"	34 1/8	23	16	7	5 5/8	8 1/8	1200
FD10-1022MT	10000	10	22	3/8E	5@1200	25"	40 5/8	23	16	7	5 5/8	8 1/8	1275
FD10-1514MT	10000	15	14	3/8E	7.5@1800	25"	34 1/8	23	16	7	5 5/8	8 1/8	1200
FD10-1522MT	10000	15	22	3/8E	7.5@1800	25"	40 5/8	23	16	7	5 5/8	8 1/8	1275

*E AFTER CABLE INDICATES EXTRA IMPROVED CABLE. CAN NEGOTIATE MOST CURVES - CONSULT OFFICE

ULTRA LOW HEADROOM SERIES

FOUR PART SINGLE REEVED

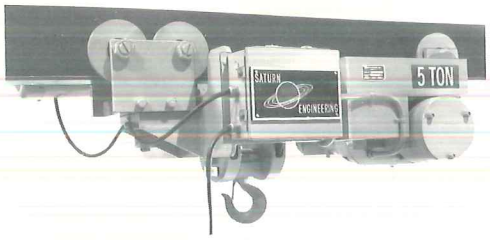

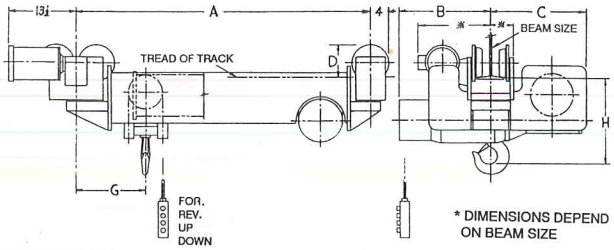

NOTE: LONGER LIFTS AVAILABLE ON FE10 THRU GE20 SERIES TO 50'

CATALOG NO.	CAP.	SPEED	LIFT*	CABLE	MOTOR	H'ROOM	A	B	C	D	G	H	WT
FE10-1015MT	10000	10	15	3/8E	5@1200	18"	46 3/8	18 3/4	19 3/4	7	14 1/8	18	1200
FE10-1022MT	10000	10	22	3/8E	5@1200	18"	52 7/8	18 3/4	19 3/4	7	14 1/8	18	1275
FE10-1515MT	10000	15	15	3/8E	7.5@1800	18"	46 3/8	18 3/4	19 3/4	7	14 1/8	18	1200
FE10-1522MT	10000	15	22	3/8E	7.5@1800	18"	52 7/8	18 3/4	19 3/4	7	14 1/8	18	1275
GE15-1015MT	15000	10	15	1/2	7.5@1200	21"	57	28	23 3/8	9	18 5/8	21	3000
GE15-1022MT	15000	10	22	1/2	7.5@1200	21"	63	28	23 3/8	9	18 5/8	21	3300
GE15-1515MT	15000	15	15	1/2	12@1800	21"	57	28	23 3/8	9	18 5/8	21	3000
GE15-1522MT	15000	15	22	1/2	12@1800	21"	63	28	23 3/8	9	18 5/8	21	3300
GE20-1015MT	20000	10	15	1/2E	10@1200	24"	63	25	25	8 3/4	19 3/4	24	3000
GE20-1022MT	20000	10	22	1/2E	10@1200	24"	65 3/8	25	25	8 3/4	19 3/4	24	3300
GE20-1515MT	20000	15	15	1/2E	15@1800	24"	63	25	25	8 3/4	19 3/4	24	3000
GE20-1522MT	20000	15	22	1/2E	15@1800	24"	65 3/8	25	25	8 3/4	19 3/4	24	3300

*E AFTER CABLE INDICATES EXTRA IMPROVED CABLE
CANNOT NEGOTIATE ANY CURVES

LONGER LIFTS ARE AVAILABLE ON ABOVE HOISTS
MAXIMUM FLANGE WIDTH 10"

ALL DIMENSIONS ARE APPROXIMATE. FOR CRITICAL REQUIREMENTS CONSULT OFFICE

SATURN ENGINEERING # 1 IN DRIVE TRACTORS

DRIVE TRACTORS

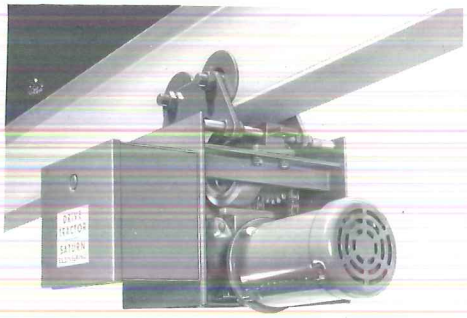

- The SATURN Engineering MONORAIL DRIVE TRACTORS have been designed for a variety of applications such as propelling hoists, cranes, conveyors, doors, gates, partitions and curtains.
- A spring loaded drive wheel with a rubber or polyurethane tire, which rolls against the bottom of the monorail, moves the TRACTOR with sufficient friction along the track to pull the load.
- The pulling capacity of a TRACTOR is directly related to the speed of travel. The motor HP is a function of capacity and speed as indicated on the chart below.
- The model T-144 TRACTOR will pull a load of up to 15,000 lbs at a speed of 70 FPM.
- The model T-150 TRACTOR will pull a load of up to 40,000 lbs at a speed of 35 FPM.
- A new model, the T-200 TRACTOR, has been added to the line to push and pull loads of yet greater capacity.
- All TRACTORS will move loads on a horizontal track or up an incline of various degrees. They can be furnished with a positive drive mechanism such as "chain and sprocket"or"rack and pinion".
- The standard speeds for models T-144 and T-150 are 35FPM 55FPM and 70FPM up to a certain capacity (see chart).
The other speeds can be supplied at addtional cost. Speeds shown in shaded areas are also available at additional cost.
- The T-144 TRACTOR will operate on rail flanges from 2" to 8" width and can negotiate 36" radius curves.
- The T-150 TRACTOR will operate on rail flanges from 3 1/4" to 10" width and can negotiate 72" radius curves.
- Both models are available with articulating trolleys with guide rollers for use on smaller radius curves at additional cost.
- TRACTOR trolley wheels can be furnished for flat or tapered rail flanges.
- The T-144 model will pass through most monorail switches and interlocks. The T-150 model could require modifications at additional cost to pass through monorail switches and interlocks.
- MONORAIL TRACTORS can operate on 208, 230 or 460V, 3PH, 60 Hz power circuits. They are also available for 115 or 230V, 1PH, 60Hz and 575V, 3PH, 60Hz power circuits at additional cost.
- Air powered TRACTORS are available in both models for similar capacities and speeds as electrical TRACTORS at additional cost.
- The standard electric motor controls are mounted in a NEMA 1 enclosure and include a reversing contractor, a transformer, a terminal strip and a pendant push button station.
- Every tractor is furnished with a tow bar for connection to customer's machinery.
- OPTIONAL EQUIPMENT: Thermal overloads, motor fusing, electronic soft start, inverter controls, inching controls, additional push button, two speed motor and motor brake. TRACTORS can be furnished weatherproof for outdoor locations and explosion proof for hazardous locations. Drive wheel release for freewheeling, hand chain drive and polyurethane drive wheels are also available.

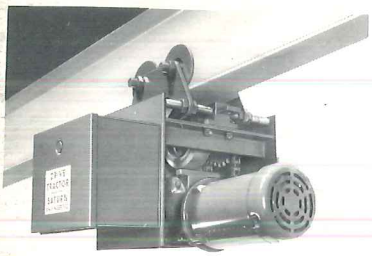

MODEL T - 144

*Dimensions depend on track size

DIMENSIONS OF DRIVE TRACTORS

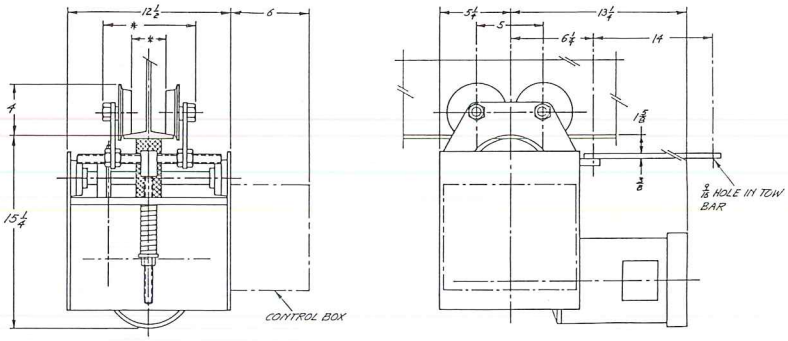

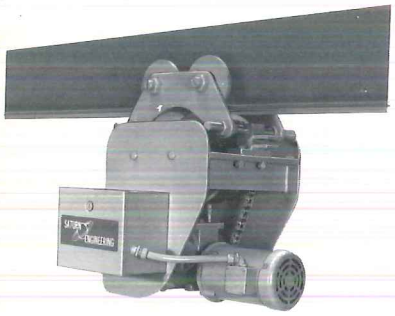

MODEL T - 150

*Dimensions depend on track size

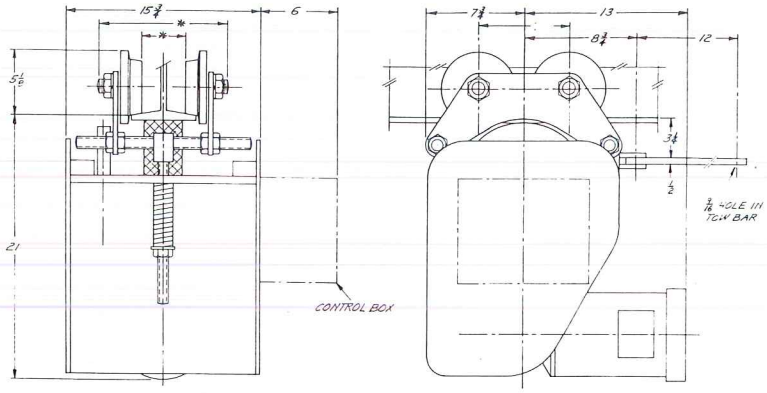

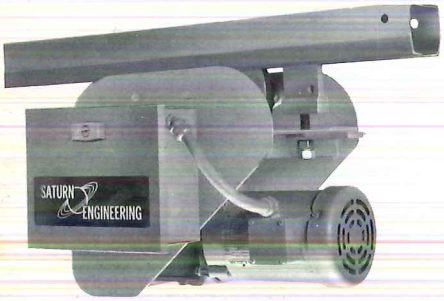

MODEL T-144-ET

The Saturn T-144-ET tractor is available to operate on ABUS, DEMAG, GORBEL, SPANCO, UNIFIED or ZIMMERMAN enclosed tracks. Standard travel speeds are 35, 50, and 70 FPM.

TRACTOR SPEEDS/HORSEPOWERS

	LOAD TO BE PULLED IN LBS.	12 F.P.M.	20 F.P.M.	25 F.P.M.	35 F.P.M.	55 F.P.M.	70 F.P.M.	90 F.P.M.	110 F.P.M.	140 F.P.M.	175 F.P.M.	200 F.P.M.
SECTION 1 T-144	2000	¼	¼	¼	¼	¼	⅓	⅓	⅓	½	½	½
	3000	¼	¼	¼	¼	¼	⅓	½	⅓	½	½	¾
	4000	¼	¼	¼	¼	⅓	⅓	½	½	½	¾	¾
	6000	¼	¼	¼	¼	⅓	½	½	¾	¾	1	1
	8000	¼	¼	⅓	⅓	½	½	¾	¾	1	1	1½
	10,000	¼	¼	⅓	½	½	¾	¾	1	1	1½	1½
	12,000	⅓	⅓	⅓	½	¾	¾	1	1	1½	1½	2
	15,000	⅓	⅓	½	½	¾	¾	1	1½	1½	2	
SECTION 2 T-150	20,000	½	½	½	¾	1	1	1½	1½	2		
	24,000	½	½	½	¾	1	1½	1½	2			
	30,000	½	½	¾	1	1½	1½	2				
	35,000	½	¾	¾	1	1½	2					
	40,000	¾	¾	¾	1	1½	2					

ALL DIMENSIONS, HORSEPOWER AND DATA ARE FOR REFERENCE ONLY.

SATURN ENGINEERING COPORATION
10 MAIN STREET
NEWARK, NJ 07105
(973) 465-0224
(800) 631-4473
FAX (973) 465-4219
VISIT OUR WEBSITE
HTTP://WWW.SATURNENG.COM

MATERIAL HANDLING INDUSTRY OF AMERICA®
MEMBER COMPANY

HMI
HOIST MANUFACTURERS INSTITUTE

DISTRIBUTED BY: